Requirements for Boiler and Pressure Vessel Manufacture Licensing

Chapter 1 General Provision

Article 1. The Requirements for Boiler and Pressure Vessel Manufacture Licensing are specially formulated in accordance with relevant requirements in the Supervision Administration Regulation for Manufacture of Boiler and Pressure Vessel (hereinafter referred to as the "Administration Regulation").

Article 2. The Requirements apply to all boiler and pressure vessel product manufacturers which specifies in “Administration Regulation” (hereinafter referred to as manufacturer).

Article 3. The Requirements are comprised of the resources requirements for boiler and pressure vessel manufacture licensing, quality management system requirements and boiler and pressure vessel safety quality requirements. The resource requirements include basic requirements and specific requirements. The basic requirements are the general requirements for producing all kinds of boiler and pressure vessel products and the specific requirements are the specific requirements for producing relevant level of boilers and pressure vessels, all of which should be met by the manufacturers simultaneously.

Article 4. Manufacturer shall establish, and continuously and effectively implement a sound quality management system suitable for its boiler and pressure vessel products. In order to verify the control capability of its quality management system for boiler and pressure vessel products, the manufacturer shall have enough practice in continuous producing boiler and pressure vessel products.

Article 5. The non-destructive examination (NDE), heat treatment, and physical and chemical property examination can be performed either by manufacturer itself or by subcontractors with relevant qualification or competence, when the manufacturer signing consignment agreement with them. The consignment agreement has to put forward to the license-issue department on file. The consignee shall issue the related report of the consigned work to the manufacturer and the manufacturer shall be responsible for the quality control of the consigned work, which should be included in the quality management system for boiler and pressure vessel of the manufacturer. The requirements of the specific requirements for resource shall not be consigned.

Article 6. Manufacturer shall have a capability of producing main body (shell and/or head) of boiler and pressure vessel products independently. It is unacceptable to consign all pressure parts of boiler and pressure vessel products to the subcontractors.

Chapter 2 Resources Requirements for Boiler Manufacture Licensing

Section 1 Basic Requirements

Article 7. The applicants for boiler manufacture licensing must have independent legal status or have registered in local governmental departments where the manufacturer is located.

Article 8. The boiler manufacturer must have suitable technical ability for boiler production and management.

1. The manufacturers should have enough technical staff for various technical processes including boiler manufacture, machining, NDE, welding, material examination and quality management. The technical staff of the manufacturer with license of level A and level B have to be no less than 10 per cent of all its employees, and those of level C and level D have to be no less than 5 per cent and not less than 5 persons. Enough professional welding and boiler manufacture technical staff must be employed by boiler manufacture.
2. The manufacturer shall have relevant personnel responsible for the stages in boiler manufacture including design, technology, material, cold working, hot working, machining, forming, welding, NDE, heat treatment, pressure test, product inspection and testing, standardization, metrology and quality management, etc.
3. Qualified NDE personnel and NDE items, qualified welders and welding operators, and welding items shall meet the requirements of the production of the products produced

Article 9. The requirements for workplace and technical facilities:

1. The area and height of workshop should meet the requirements for manufacture of boilers with the applied licensing level. The manufacturing process should be rationally arranged. The welding of pressure parts of boilers shall be performed in workshop.
2. Pipes and semi-finished products should be kept at the place under certain protection.
3. Warehouse for keep welding consumables that require control of temperature and humidity during storage must equipped with equipment to ensure the required temperature and humidity. Drying and temperature-maintaining oven to make these welding consumables ready for use is also required.
4. There should be radiographic testing site that can meet both product requirements and protection requirements. There should be basic conditions to ensure quality of developed negative film and the storage of the radiographs.
5. NDE facilities that fit for the manufacture of the products are required except NDE is performed by subcontractors.
6. Fixtures are required to meet demand of boiler product manufacture.
7. The Lifting capacity at main workshops should meet the manufacturing demand of boiler products.
8. The drilling and pipe-bending machines should meet the manufacturing demand of boiler products.

9. Welding machines that fit for boiler product manufacture are required.
10. Examination Platform and tools, and hydrostatic pressure testing facilities suitable for production are also required.
11. Mechanical property testing facilities, physical and chemical property examination devices or a consignment relationship of the above mentioned testing and examination with competent subcontractors are required.
12. The applicants should have the machining tools, including cutting machines, presses and bevel machines for both plates and pipes to meet the demand for the manufacture of boilers of applied licensing level. Compact boiler manufacturer must have the ability to turn out final products.

Article 10. The resources requirements for the manufacture licensing of organic fluid heater and the resources requirements for level A boiler parts may consult the relevant resource requirements for the manufacture licensing of level C and level A boilers respectively. Furthermore, the manufacturing equipment required should match the manufacturing products.

Section 2 Specific Requirements

Article 11 Specific requirements for manufacture licensing of level A boiler

1. Requirements for technical resource:

1). There should be chemical and physical property testing lab and metallographic examination lab suitable for the manufacturing products

2). There should be welding labs suitable for manufacturing products

3). There should be R&D capacity for design new products and the capacity for production of the new products.

4). There should be enough staff for standardization, metrology and enough full-time inspectors

5). There should be NDE examiners that hold RT III and UT III certificates in addition the examiners with level II certificates in RT, UT, MT, PT. Provided the NDE are consigned outside, the above requirements for examiners holding RT II and UT II certificates may be exempted.

6). The number and granted item of qualified welder and welding operator should be satisfying the requirements of production, it should be not less than 50 person-items in general.

2. Requirements for manufacture equipment and fixture:

1). The capacity of semi-automatic or automatic cutting machines should meet the cutting thickness demand for manufacturing level A boilers.

2). Welding equipment including automatic arc welding machine, gas shield arc welding machine and manual arc welding machine, etc. should meet the demand of the manufacturing products.

3). Level-A manufacturers must have two of the following three significant facilities: If only one of the three is existent, the manufacturer can only apply for level A license of boiler parts manufacture.

(1) Boiler drum manufacture equipment:
a. Hydraulic or oil presses with capacity of not less than 1000 tons.
b. Plat bending machine with bending capacity not less than 46mm thickness of steel plate in general.
c. Heat treatment furnace for boiler cylinder.
(2) Water wall production equipment (including welding, flattening and panel blending machines)
(3) Spiral pipe production equipment and heat treatment furnace for headers of superheater and of reheater.
3. Examination and Testing Equipment
1). Metallographic examination apparatus suitable for manufacture of level A boiler products.
2).Standard metrological instruments for length, thermal, force, electric measurement or a fixed tracing system to for their magnitude.
3).Mechanical property testing machine, machining tools and instruments for prepare impact test specimen or having consignment agreement with competent subcontractor.
4).NDE equipment in good condition including thickness gauge, radiographic detector, ultrasonic flaw detector, magnetic particle and dye penetration testing devices are required provided NDE is performed by the manufacturer itself.

Article 12 Specific requirements for manufacture licensing of level B boiler
1. Requirements for technical resource:
1). There should be enough capacity for changing the requirements in drawing to actual manufacturing technology.
2). There should be enough full-time inspectors.
3). The qualified RT II and UT II examiners should not less than 2 persons respectively. The figures can be decreased to 1 person respectively provided the NDE are consigned outside.
4). The number and granted item of qualified welder and welding operator should be satisfying the requirements of production and not less than 30 person-items in general.

2. Manufacture and inspection and testing equipment
1). Press or the ability to coordinate quality warranty subcontractor is required to meet the demand of products
2). Plate bending machine is required to meet product demand (with bending capacity of 20-30mm thickness of steel plate in general)
3). The maximum lifting capability in main workshop should satisfy the product demand and normally be not less than 20 tons.
4). Enough welding equipment including automatic submerged arc welding machine, gas shield arc welding machine and manual arc welding machine, etc. are required to meet the demand of products.
5). Mechanical property testing machine and machine tools and instruments for preparing impact testing specimen or the ability to coordinating all the quality warranty tests are required.

6). Platform for lofting and examining bending pipe in accordance with requirements is needed.
7). Radiographic detectors (at least including one circumferential exposing radiographic machine) and one ultrasonic flaw detector are required to meet requirement of products provided the NDT is performed by the manufacturer itself.

Article 13 Specific requirements for manufacture licensing of level-C boiler
1. Requirements for technical resource:
1). There should be enough full-time inspectors.
2). The qualified RT II examiners should not less than 2 persons. The figures can be decreased to 1 person provided the NDE are consigned outside.
3). The number and granted item of qualified welder and welding operator should be satisfying the requirements of production and not less than 20 person-items in general.

2. Manufacture and Inspection and Testing Equipment
1). Press or the ability to coordinate a quality-warranty subcontractor is required to meet the demand of the manufacturing products.
2). Plate bending machine is required to meet the demand of manufacturing product (bending capability: 12--20mm thickness steel plate in general).
3). The maximum lifting capability in main workshop should satisfy the demand of manufacturing product and normally be not less than 10 tons.
4). Enough welding equipment including automatic submerged arc welding machine and manual arc welding machine, etc. is required and should meet the demand of the manufacturing products.
5). At least a radiographic detector in good condition is required to meet the demand of the manufacturing products provided the manufacturer itself performs the NDT.

Article 14 Specific requirements for manufacture licensing of level-D boiler
1. Requirements for technical resource:
1). At least one qualified RT II NDT examiner is required..
2). The number and granted item of qualified welder and welding operator should be satisfying the requirements of production and not less than 10 person-items in general.

2. Manufacture and Inspection and Testing Equipment
1). Equipment for cutting, welding, drilling, pipe-bending, plate-bending and machining is needed to meet the product's demand.
2). Forming and machining equipment are required to meet the demand of manufacturing products.
3). The maximum lifting capability in main workshop should satisfy the demand of manufacturing product and normally be not less than 5 tons.
4). At least one radiographic detector in good condition is required to meet the demand of the manufacturing products provided the manufacturer itself performs the NDT.

Chapter 3 Resource Requirements for Pressure Vessel Manufacture Licensing

Section 1 Basic requirements

Article 15 The applicants for pressure vessel manufacture licensing must have business license or have registered in relevant local governmental departments where the manufacturer is located.

Article 16 The manufacturers of pressure vessel, that have been granted level A1, level A2 or level C manufacture license, will be granted level D License automatically. No manufacture license is required for those manufacturers who produce pressure vessel products with design pressure less than 10 MPa, the same time the maximum inner diameter less than 150mm and the water volume less than 25L. Similarly, manufacture licensing is also unapplied to those products, such as, shells of dependent pressure parts attached to machine, sleeved-tube type heat exchanger without shell, corrugate plate heat exchanger, air-cooler and cooling panel. The manufacturer who produces pressure-containing shell with irregular shape should report Safety Supervision Administration of AQSIQ in order to determine if the application for manufacture licensing is required.

Article 17 Quality assurance system staff for pressure vessel

Pressure vessel manufacturer should provide the following quality control system with responsible persons having relevant professional knowledge, experience and suitable for the manufacturing products.

1. Responsible persons for design and technological process control system
2. Responsible persons for material quality control system
3. Responsible persons for welding quality control system
4. Responsible persons for chemical and physical testing quality control system
5. Responsible persons for heat treatment quality control system
6. Responsible persons for NDT quality control system
7. Responsible persons for pressure testing quality control system
8. Responsible persons for final inspection and testing quality control system

Article 18 Technical staff

The pressure vessel manufacturer should have all the professional technical staff that meets the demand of pressure vessel manufacture and management. Technical staff for various manufacture licensing levels of pressure vessel should meet the following requirements:

1 Technical staff in the manufacturers of licensing level A1 and level A2, level C and level B1 have to be no less than 10 % of all employee and there should be professional technical persons with relevant knowledge suitable for the requirements of manufacturing product.

2. Technical staffs in manufacturer of level A3, level A4, level A5, level B2 and level B3 have to be no less of 5 % of all employee and not less than 5 persons and there

should be technical persons with relevant knowledge suitable for the requirements of manufacturing pressure vessel products.

Article 19 Professional operator

1. Among all levels of pressure vessel manufacturers, the manufacturer of welded pressure vessels should have qualified welders and welding operators to meet the demand of products.

1). Level A2 and level A3 and Level C licensing manufacturer should have at least 10 qualified welders and welding operators who have at least 4 granted items together.

2). Level A1, level A5, level B2 and level B3 licensing manufacturer should have at least 8 qualified welders and welding operators who have at least 3 together granted items (except for non-welded vessels manufacturers).

3). Level D licensing manufacturer should have at least 6 qualified welders and welding operators who have at least 2 granted items together.

2. All levels of manufacture licensing pressure vessel manufacturers should have the assemblers who can meet the requirements of pressure vessel production.

3. Among all levels of pressure vessel manufacturers, those who consign the NDE to other enterprises should have high- and middle-level of responsible qualified NDE examiners in accordance with the manufacture level. If the manufacturers themselves perform the NDE, the qualified NDE examiners should meet the following requirements:

1). Level A1 licensing manufacturer should have at least one qualified high-level RT (or UT, MT, PT) examiner who is responsible for NDE.

2). Level C licensing manufacturer should have at least one qualified high-level RT (or UT) examiner and two qualified middle-level RT and UT examiners respectively.

3). Level A2 and level A3 licensing manufacturer should have at least three qualified RT and UT middle-level examiners respectively, and the responsible person for NDE should hold middle-level certificate or higher.

4). Level A5, level B2 and Level D licensing manufactures should have at least two qualified RT and UT examiners respectively and the responsible persons for NDE should hold middle-level certificate or higher.

5). Level B1 licensing manufacturer should have at least two UT and MT examiner respectively and the responsible persons for NDE should hold middle-level certificate or higher.

6). Level B3 licensing manufacturer should meet the requirements of level B1 or level B2 for the number and level of NDE examiners provided it needs to perform NDE.

Article 20 Pressure vessel manufacturers licensing on all levels should have suitable workshop, machining tools, forming equipment, cutting and welding machines, lifting appliances, and necessary fixtures and should meet the following requirements:

1. Enough warehouse or specific areas with effective protection measures for storing pressure vessel materials; distinctive marks should be put between areas for the

acceptable materials and unacceptable materials.
2. Specific warehouse with drying and temperature maintain ovens, suitable for welding materials storage.
3. The manufacturer should have enough working site for radiographic testing and welding lab suitable for the requirements of product production.

Section 2 Specific requirements

Article 21 All levels of pressure vessel manufacturers should meet specific requirements in articles 22-25.

Article 22 Specific requirements for level A pressure vessel manufacture licensing

1. Super-high pressure vessel manufacturer in level A1 licensing manufacturer should have machining tools and inspection and testing devices suitable for producing super-high pressure vessel and have at least 2 middle-grade or high-grade machinists. The high-pressure vessel manufacturer should have heat treatment furnaces suitable for production.
2. Level A2 licensing manufacturer should have plate bending machine with rating capacity no less than 30mm in plate thickness and lifting appurtenance with lifting capacity of no less than 20 tons. The cryogenic (isolated) vessel manufacturer should have equipment for packing filling, drying, vacuuming and leak detector.
3. Spherical tank petal manufacturer among level A3 licensing manufacturer should equip with press with capacity not less than 1200 tons and have experienced professional operator in producing the petal.
4. Fiber wrapping vessel manufacturer among level A4 licensing manufacturer should have automatic wrapping machine.
5. Level A5 licensing manufacturer should at least have 2 qualified electrician with middle-grade or above and electric inspection and testing equipment.

Article 23 Specific requirements for level B pressure vessel manufacture licensing

1. Level B licensing manufacturer should have specific site and automatic recording devices for burst testing of gas cylinder.
2. Level B1 licensing manufacturer should have continuous gas cylinder production line. The manufacturers, that produces gas cylinders requiring quenching and tempering heat treatment, should have UT or MT detectors, heat treatment furnace for quenching and tempering treatment and the hydrostatic pressure testing device with measurable water jacket volumetric expansion.
3. Level B2 licensing manufacturer should have gas cylinder production line. Among them, the acetylene gas cylinder production line should equip with equipment for compounding material, mixing, vibrating and drying and autoclaves etc., The LPG gas cylinder manufacturer should have continuous production line and heat treatment furnace with automatic recorder.
4. Level B3 licensing manufacturer should have specific manufacture facilities and production lines; those who produce wrapping gas cylinders should have wrapping machines and solidifying device.

5. Other specific equipment for manufacturing specific products.

Article 24 Specific requirements for level C pressure vessel manufacture licensing

1. Level C1 licensing manufacturer should have specific railway line.
2. Level C2 and level C3 licensing manufacturers should have relevant assembly capability and testing facilities.

Article 25 Stainless or non-ferrous metallic vessel manufacturer should have specific workshop, processing equipment, forming equipment, cutting equipment, welding machines, lifting appliances, and necessary fixtures. The above specific equipment should not be used for carbon steel

Article 26 The manufacturers with several licensing levels should meet the relevant specific requirements respectively.

Chapter 4 Basic Requirements for Quality Management System

Article 27 Management responsibility

The boiler and pressure vessel manufacturer shall define and document its policy and objective for quality. The manufacturer should make necessary measures to ensure this policy is understood and implemented at all of its staff and should meet the following requirements:

1. The quality related activities, responsibility, authority and the relationship among them should be clearly defined. There should be the control and coordinate measures for the interrelation among the different activities.
2. The responsibility, authority and the interrelation of personnel who manage, perform and verify work affecting quality, especially those who are authorized to conduct work independently, shall be defined and documented (including the responsibility of the personnel who is in charge of material, welding, and NDE). The manufacturer’s management with executive responsibility shall appoint a member of the manufacturer’s own management as quality assurance engineer and defining his/her duty and authority for assuring the establishment, implementation, maintenance and improvement of its quality system

Article 28 The boiler and pressure vessel manufacturer should establish a quality system documentation suitable for design and manufacturing of boiler and pressure vessel, which should include the fundamental elements of quality management.

1. Quality Manual should be established as a means for assuring that the product conforms to the specified requirements. The quality manual should include or make reference to the quality system procedures and outline the structure of the documentation used in the quality system.
2. The manufacturer should prepare documented procedures consistent with the requirements and manufacturer’s stated quality policy, and effectively implement the quality system and its documented procedures.

3. The forms required by quality manual should be documented with standard format. The contents in the current quality record forms should meet the requirements for quality control of boiler and pressure vessel product with relevant levels.
4. The implementing quality plan should assure the quality of product. The quality control points for product in the quality plan (including checkpoint, witness point and hold point) should be reasonably arranged.

Article 29 Document and data control

The manufacturer should establish documented procedures to control all documents and data. They should include:

1. Establishment of document management procedure

(1). The manufacturer should clearly identify the documents to be controlled.

(2). The manufacturer should establish the procedures for draft, joint review, distribution, change, recovery and maintenance of documents.

2. The manufacturer should establish the provisions for assuring that only the latest version of the documents can be used in the relevant departments.

3. The manufacturer should establish the procedure for management of external documents such as, standards and customer-provided drawings.

Article 30 Design control

1. The manufacturer should clearly identify the responsibility of personnel at all level in design department.
2. The manufacturer should keep the relevant codes, regulations and standards concerned to the boiler and pressure vessel manufacture.
3. The design documents should specify that the boiler and pressure vessel produced should meet the relevant safety quality requirements (see Chapter 5 onwards).
4. The manufacturer should establish the provisions of collecting and implementing new standards.
5. The manufacturer should establish the procedure for design control (including the links of design input, output, review, change and verification).

Article 31. Purchasing and material control should include:

1. Purchasing

1). The procedure for effective quality control of supplier should be formulated.

2). The disposal measures for unacceptable goods provided by supplier should be formulated.

3). The pressure parts should be provided by the suppliers that have recognized by Chinese government or its authorized department. The manufacturer should effectively control of the quality of products subcontracted.

4). The control procedure for purchasing documents should be formulated.

5). The rules for check, accept and control of the purchasing materials and products i.e. plate, tube for pressure parts should be formulated.

2. Storage and distribution of material

1).The manufacturer should establish the rules for storage of the raw materials, and

purchasing products including stockpile, identification, sorting etc.
2). The manufacturer should clearly prescribe the measures for storage the material in warehouse.
3). The manufacturer should establish the rules for material distribution including material release and substitution.
4). The manufacturer should establish the rules for transplantation of material identification including the transplantation during processing and the handling of surplus material.

Article 32 Technology control

1. The manufacturer should establish the procedures for the management of technological documents, including draft, release, change, review and approval of them.
2. The manufacturer should establish the technological flow diagram or product processing card or product technology card (or work instruction) suitable for the boiler and pressure vessel products.
3. The manufacturer should establish the technological flow diagram or technological document for instructing the operator (work instruction) for main pressure parts.

Article 33 Welding control

1. Management of welding consumables

   The manufacturer should keep and effectively implement a management rule for welding consumables including order, receive, inspection, storage, drying, release, use and restore of them.

2. Welding management

1). The manufacturer should establish the stipulations for training, qualification and the file management of welders and welding operators.
2). The manufacturer should establish the stipulations for welding procedure qualification (PQR), welding specification (WPS) or welding process card suitable for its boiler and pressure vessel products and the requirements of the relevant technical codes. The management stipulations for verifying the PQR and the distribution, use, amend of WPS are both required.
3). The manufacturer should take necessary measures for assuring that welding of pressure parts must be performed by qualified welders. The procedures for welder qualification, the management of the record of the welder performance qualification (WPQ) and the method and implementation for identifying the welder symbol on welds should both be required.
4). The manufacturer should stipulate the procedures for the approval formalities for welding repair, the requirement of re-examination of repaired weld and the process of welding repair of flaws in base metal.
5). The manufacturer should establish the stipulation for keeping welding record of main pressure parts.

Article 34 Heat treatment control

1. The manufacturer should establish the procedures for management of technological documents for heat treatment including draft, review and approval, use, distribution, recording and maintenance of them.
2. The manufacturer should establish the rules for the management of heat treatment quality control.
3. The manufacturer should establish procedure for the management of the subcontractor, which should include, at least, the evaluation of the subcontractor and the quality control items for subcontracted products, if the heat treatment is consigned to subcontractors.

Article 35. NDE control

1. The manufacturer should formulate a procedure for quality control of NDE including determining the NDE methods, selection of standards and codes, draft and approval of NDE technological documents, control of operation, sign and issue of NDE report and the management of radiograph films.
2. The manufacturer should formulate the technological process card and record forms suitable for the manufacturing products.
3. The manufacturer should formulate the rules for the management of qualification of NDE personnel.
4. The manufacturer should establish procedure for the management of the subcontractor which should include, at least, the evaluation of the subcontractor and the quality control for subcontracted items, if the NDE is consigned to subcontractors.

Article 36. Chemical and physical examination and testing

1. The manufacturer should formulate a management procedure for chemical and physical examination testing.
2. The manufacturer should formulate a procedure for verification of the chemical and physical examination and testing results and for repeat examination and testing of them.
5. The manufacturer should establish procedure for the management of the subcontractor which should include, at least, the evaluation of the subcontractor and the quality control for subcontracted items, if the chemical and physical examination and testing are consigned to subcontractors.

Article 37 Pressure testing control

1. The manufacturer should formulate technology and related procedure for pressure testing.
2. The manufacturer should formulate a procedure on quality control for pressure testing including the supervision and verification of pressure testing, safety protection during pressure testing and the temperatures of test medium and of environment, etc.

Article 38. Control of other inspection and testing

1. The manufacturer should formulate a procedure for the management of inspection and testing including the authority and responsibility of inspector, incoming inspection, process inspection, final inspection, the file of inspection report and the management of quality testimony, etc.
2. The manufacturer should formulate and implement inspection and testing plan.
3. The manufacturer should formulate provisions for identification of inspection and testing status.

Article 39. Control of metrology and equipment

1. The manufacturer should formulate the provision of metrology management to assure the measuring meters, instruments and tools to be used are in their valid calibration period.
2. The manufacturer should formulate the provisions for effective control, calibration and maintenance of the measuring meters and testing instruments.
3. There should have provisions that the metrology environment should be suitable to the undertaking metrology testing.
4. There should have the provisions for the management of manufacturing equipment.

Article 40. Control of non-conformity product

1. The manufacturer should establish documented procedures to ensure that product that does not conform to specified requirements is prevented from inadvertent use or installation.
2. The manufacturer should establish provisions for identification, record, evaluation, segregation (where practical), disposition of non-conforming products.

1). The provisions for drafting, review and approval and file of non-conformity report should be established.

2). The relevant provisions for the links of disposal of non-conformity products (use as it is, rework and scrap)should be established.

3). The provision that the re-inspection of reworked product should be established.

Article 41. Quality improvement

1. A flow chart for feedback, collection and analysis, and disposal of product quality information (both inside and outside manufacturer) should be established.
2. A procedure on planning and implementing internal quality audit should be established in order to ensure the normal implementation of quality assurance system, analyzing and investigating the exist quality problems and putting forward the solving and preventing measures to the problems.
3. The Provisions for internal quality audit including that the audit should be carried out by personnel independent of those having direct responsibility for the activity being audited should be established.

1). It should have a provision for receiving, disposal and answer to the comments of the quality audit and the corrective or improvement measures to them.

2). It should have a provision for solving the product quality problems raised by

supervisory inspection agency (or the third party inspection agency) or customers in time.

Article 42. Training

The manufacturer should established a documented procedures for the training of quality assurance engineers, welding engineers, inspectors, chemical and physical testing personnel, NDE examiner, welder and welding operators and those personnel engaged in manufacture, verification and management whose activities great affecting quality.

Article 43. The procedure for implementing China boiler and pressure vessel manufacture licensing system

1. The manufacturer should establish a documented procedure for implementing China boiler and pressure vessel manufacture licensing system. It should clearly defined the control procedure for boiler and pressure vessel products to be used in China. It should be also specified that the auditors conducting survey and assessment for manufacture licensing shall have free access, at the manufacturer facility, to all concerned drawings, calculation sheets, procedures, records, the inspection and test results and other necessary documents and data.
2. The manufacturer should specify the use and management of boiler and pressure vessel manufacture license.
3. The manufacturer should specify that it should provide with the product certificate of compliance and other delivery documents to the Chinese customer.

Chapter 5 Quality Requirements for Boiler and Pressure Vessel Products

Section 1 Safety quality requirements of boilers

Article 44. General requirements

The boilers produced by boiler manufacturer should meet the requirements of the following safety technical codes and regulations.

1. Technical Supervision Regulation for Safety of Steam Boilers
2. Technical Safety Supervision Regulation for Hot Water Boilers
3. Technical Safety Supervision Regulation for Organic Fluid Heaters
4. Technical Safety Supervision Regulation for Small and Atmospheric Hot Water Boilers

Manufacturers outside China, who have difficulties to completely carry out the above-mentioned regulations, are allowed to adopt the technical codes and standards, which is conventional and complete in system and are used by most countries after having approved by Boiler and Pressure Vessel Safety Supervision Administration of AQSIQ. But, in this case, they must meet the requirement as stipulated from article 45 to 50 onwards simultaneously.

Article 45. Requirements of steel for pressure components of boiler

Steel for pressure components of the boiler (including staying components) must be

killed-steels. The designations of the steel should be those listed in foreign boiler steel standards, or of conventional boiler steels.

Article 46. Requirements for boiler structure

The structure of boiler should be in complete accordance with above-mentioned Chinese safety technical regulations for boilers.

Article 47. Requirements product inspection

The results of visual inspection of boiler, mechanical property testing of welded joint, metallograpy and fractography, hydrostatic pressure test, and the NDE items and detective rate must satisfy the requirements of above-mentioned Chinese boiler codes and regulations.

Article 48 The requirements for safety appurtenances and metering devices

1. The spring-loaded safety valves for steam boilers should be of the full lift type.
2. The spring-loaded safety valve with threaded connection should be connected with a stub and the latter should be welded to the drum or the header.
3. Pressure gauge and thermometer should be of SI unit.
4. Two independent water-level gauges should be mounted on the drum of every steam boiler. Only one gauge may be mounted if one of the following conditions is met:

1) For boilers with a rated capacity not greater than 0.5 tons/hr.

2) For boilers with a rated capacity not greater than 2 tons/hr, and equipped with a set of reliable water level controlling device.

3) For boilers provided with two sets of independent remote water level display devices.

4) For electric heating boilers

5. For boilers with a rated capacity not less than 2 tons/hr, the low/high water level alarms and low water level interlock-protection device should be provided. For boilers with rated capacity not less than 6 tons/hr, the over-pressure alarm and the over-pressure interlock device should be provided.

6 For coal-fired, oil-fired, or gas-fired boilers, the ignition sequence controller and extinguish protection devices should be provided.

7. For hot water boilers with rated temperature of outlet water not less than 120 ℃ or with rated heating capacity not less than 4.2 MW, the over-temperature alarm should be provided.

Article 49 Requirements for delivery documents

The following safety-related technical documents are required when the boilers are to be delivered.

1. Boiler drawing (including general drawing, installation drawing and drawings of main pressure parts).

2. Strength Calculation sheets for pressure components and the calculation sheets for relieving capacity of safety valves (or selected from operational manual of the safety

valves) or a summary of above mentioned calculation results.

3. Product quality testifying documents (including product certificate of compliance, material mill sheets for main pressure parts, NDE reports, post-welding heat treatment reports and hydrostatic pressure test report).
4. Installation and operational manual for the boiler.
5. Boiler with rated pressure equal to or greater than 3.8MPa should also attach to the following documents:

1). Calculation sheets for thermodynamic, wall temperature of super-heater, and for fuel gas resistance or a summary of the above calculation results.

2). System thermal expansion diagram.

6. For boilers with rated pressure not less than 9.8 MPa, the following additional documents should be provided:

1). The calculation sheets for the wall temperature of re-heater and for boiler water circulation or a summery of the calculation results.

2). Diagram of the steam-water system of the boiler.

Article 50 Requirements for nameplate

A metallic nameplate should be put on the conspicuous place on the boiler. The contents on the nameplate should include at least the following items (in Chinese or English and using SI units):

1. Name and address of manufacturer,
2. Level and serial number of manufacture license,
3. Rated steam capacity (thermal power),
4. Rated steam pressure (outlet pressure),
5. Rated steam temperature (outlet temperature),
6. Steam temperature at inlet and outlet of the re-heater (not applicable for the boilers without re-heaters),
7. Manufacturing number of the boiler,
8. Manufacturing date.

Section 2 Basic requirements for the safety quality of pressure vessels

Article51. General requirements

Pressure vessels produced by pressure vessel manufacturers should meet the requirements of the following Chinese pressure vessels' safety technical codes and regulations:

1. Safety Technical Supervision Regulations for Pressure Vessel,
2. Safety Supervision Regulations for Super-high Pressure Vessels,
3. Safety Supervision Regulation on Baric Oxygen Chamber for Medical Treatment,
4. Safety Supervision Regulations for Gas Cylinders,
5. Safety Supervision Regulations for Dissolved Acetylene Cylinder,
6. Safety Supervision Regulations on Liquefied Gas Containers for Tankers.

Manufacturers outside China, who have difficulties to completely carry out the above-mentioned regulations, are allowed to adopt the technical codes and standards, which is conventional and complete in system and are used by most countries after

having approved by safety supervision administration under AQSIQ. But, in this case, they must meet the requirement as stipulated from article 52 to 58 onwards simultaneously.

Article 52. Requirements for safety quality documents of pressure vessel products

Pressure vessel products should at least have the following technical documents concerned with the safety of them during delivery:

1. As-built drawing of pressure vessel (including general drawing and drawings for main pressure components).
2. Strength calculation sheets for main pressure parts of level A1, level A2 and level C licensing pressure vessels or a summary of the calculation results.
3. Calculation sheets for the required safe relieving capacity of pressure vessel, relieving capacity of safety valves and/or the discharge area of bursting or a summary of above calculation results.
4. Testifying papers of product quality including certificate of compliance of the product, mill reports for main pressure parts, NDE reports, heat treatment reports, pressure test reports and leak test reports, etc.,

Article 33: Requirements for product nameplate

The manufacturer shall set a metallic nameplate on a conspicuous place of the pressure vessel. The following items, as a minimum, shall be included (written in Chinese or English both with SI unit) in the contents of the nameplate:

1) Name of product,
2) Name and address of manufacturer,
3) Level and serial number of manufacture license,
4) Working medium,
5) Design temperature,
6) Design pressure,
7) Pressure test pressure,
8) Manufacturing number of product,
9) Manufacturing date,
10) Class of vessel,
11) Volume of vessel.

Article 54: Design requirements

1. The safety factor for allowable stress of materials (design safety factor) should be determined in accordance with the following requirements:

In general, the safety factor for steel pressure vessel shall not be less than 3 if the design is based on the tensile strength at ambient temperature. The factors should normally not less than 1.6 for carbon steel and low alloy steel and not less than 1.5 for high alloy steel if the design is based on the yield strength at ambient temperature. Otherwise, it should subject to prior approval by the safety supervision administration of AQSIQ.

The safety factor for stress analyzing design should normally not be less than 2.6

if the design is based on the tensile strength at ambient temperature and should normally not be less than 1.5 if the design is based on the yield strength both at ambient and design temperatures. Otherwise, it should subject to prior approval by the safety supervision administration of AQSIQ.

The design safety factors for steel and nonferrous metal pressure vessel should be selected from Table 1.

Table 1. Design Safety Factor for Steels, Al, Cu, Ti, Ni and Their Alloys

Conditions / **Material**			**Tensile strength at design temps.** σ_b^t	**Yield limit at design temp.** $\sigma_{0.2}^t$	**Average endurance strength at design temp. (rupture strength at 10^5 hours)** σ_d^t	**Average creep limit at design temp. (with creep rate of 0.01% per 1000 hours)** σ_n^t
Carbon steels, low alloy steels			$n_b \geqslant 3.0$	$n_s \geqslant 1.6$	$n_d \geqslant 1.5$	$n_n \geqslant 1.0$
High alloy steels			$n_b \geqslant 3.0$	$n_s \geqslant 1.5$	$n_d \geqslant 1.5$	$n_n \geqslant 1.0$
Al, Cu, Ti, Ni and their alloys	Plate, forging, Pipe & bar	Ti	$n_b \geqslant 3.0$	$n_s \geqslant 1.5$	$n_d \geqslant 1.5$	$n_n \geqslant 1.0$
		Ni	$n_b \geqslant 3.0$	$n_s \geqslant 1.5$	$n_d \geqslant 1.5$	$n_n \geqslant 1.0$
		Al	$n_b \geqslant 4.0$	$n_s \geqslant 1.5$		
		Cu	$n_b \geqslant 4.0$	$n_s \geqslant 1.5$		
Cast irons	Grey cast iron		$n_b \geqslant 10.0$			
	Nodular or malleable cast iron		$n_b \geqslant 8.0$			
Cast steels	Design temp. ⩾300℃		$n_b \geqslant 4.0$/ **casting factor**			
	Design Temp.＜300℃		$n_b \geqslant 1.5$/ **casting factor**			
Bolt	Carbon steel		$n_b \geqslant 5.0$	$n_s \geqslant 2.7$ **(H.R)**	$n_d \geqslant 1.5$	
				$n_s \geqslant 2.5$ **(N)**		
	Low alloy steel High alloy steel			$n_s \geqslant 3.5$ **(Q&T)**		
				$n_s \geqslant 2.7$ **(Q&T)**		
	Martensite steel Austenitic steel			$n_s \geqslant 3.0$ **(Q&T)**		
				$n_s \geqslant 1.6$ **(S)**		
	nonferrous metals		$n_b \geqslant 5.0$	$n_s \geqslant 4.0$		

Note:

a. When the yield strength (or conditional yield strength) at design temperature cannot be determined and the allowable stress is based on the tensile strength of material, the value n_b shall be raised appropriately.

b. The casting factors of nonferrous metals shall be determined by the corresponding values for plate, forging, pipe or bar divided by 0.8.

c. The casting factor of cast steel shall not exceed 0.9.

d. H.R—Hot Rolled, N—Normalized, Q&T—Quenched and Tempered, S—Solution heat- treated.

2. If the pressure vessel is designed by stress analysis, the manufacturer should register at the safety supervision administration of AQSIQ.
3. If the pressure vessel is designed by the strength calculation method other than

those in the relevant standards or designed by proof testing, the manufacturer should register at the safety supervision administration of AQSIQ.

4. The design for transportable pressure vessel should be submitted to the safety supervision administration of AQSIQ for review and register.
5. All welded joint of category A and B (see figure below) should be non-destructive examined (RT or UT) in accordance with the relevant standards and design drawing.

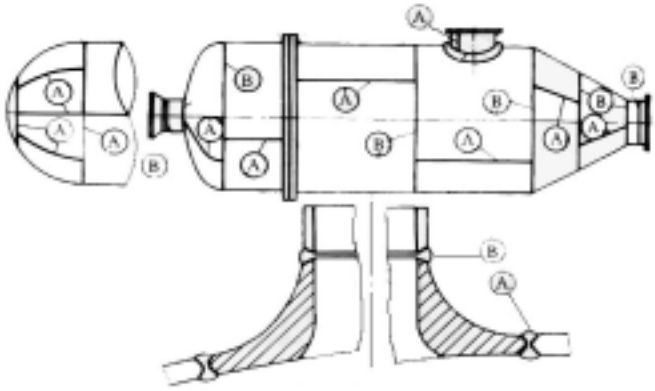

Scheme of Category A and Category B Welded Joints

The joint efficiency shall be determined according to the type of welded joint of the welded pressure parts and the percentage of NDE. Table 2 gives the stipulations for the joint efficiency.

Table 2 Joint Efficiency of Welded Pressure Vessel

	Full NDE					Spot NDE				
	Steel	Nonferrous metal				Steel	Nonferrous metal			
		Al	Cu	Ni	Ti		Al	Cu	Ni	Ti
Butt joint as attained by double welding or by other means having the same quality as full penetrating double welding	**1.0**	**0.85 / 0.90**	**0.85 / 0.95**	**0.85 / 0.95**	**0.90**	**0.85**	**0.80 / 0.85**	**0.80 / 0.85**	**0.80 / 0.85**	**0.85**
Single-welded butt joint with backing strip	**0.90**	**0.80 / 0.85**	**0.80 / 0.85**	**0.80 / 0.85**	**o.85**	**0.80**	**0.70 / 0.80**	**0.70 / 0.80**	**0.70 / 0.85**	**0.80**
Single-welded butt joint without backing strip	**/**	**/**	**/**	**/**	**/**	**/**	**/**	**0.65 / 0.70**	**0.65 / 0.70**	**/**

Note:

a. NDE in the Table means RT or UT for steel pressure vessels and RT for non-ferrous metal pressure vessels in principle. Full NDE means 100% RT or UT; and spot NDE means 20% or 50% (for ferrite steel low temperature pressure vessel) RT or UT.
b. The upper limit of joint efficiencies for nonferrous metal pressure vessel is for welded joint fabricated by metal inert-gas welding, The lower limit is for welded joint fabricated by gas tungsten arc welding.
c. The words “by other means having the same quality as full penetrating double

welding " in the Table means the welded joint welding by one side which can assure good weld appearance at both side. In this case, it should be qualified with the same measures as for welding by both sides (including the qualification of welding testing plate). The welds by using argon shielded arc welding in backing welding or using ceramic or copper backing pads are the examples.

6. The design pressure of liquefied petroleum gas (LPG) vessels operated at ambient temperature should base on the actual saturated vapor pressure of the mixed compositions of LPG at a temperature not lower than 50℃. The limitation of LPG compositions and the corresponding working pressure shall be noted on the design drawing.
7. Neither lap joint nor cruciform joint is permissible for connecting shell to shell, shell to head and for connecting welds in welded heads.
8. One hand hole or two hand holes (for those vessels impossible to fit man-hole) should be provided for the pressure vessels with inner diameter not less than 500mm (except for those vessels, such as, jacket vessel, heat exchangers where the opening on the vessel are not allowed).
9. The safety interlocking devices shall be provided for pressure vessels with quick-actuating doors (closures).

Article 55: Requirements for pressure vessel steels

1. The materials for pressure components of pressure vessel shall be used within the applicable range of relevant standards.
2. The phosphor and sulfur contents of the carbon steel and low-alloy steel used for main pressure components of welded pressure vessel shall not be greater than 0.030% and 0.020% respectively.
3. The carbon contents in carbon steel and low-alloy steel used for main pressure components of welded pressure vessel shall not be greater than 0.25%, and the carbon equivalent Ceq should not be more than 0.45%. If the carbon and low-alloy steel, which carbon contents are greater than 0.25%, are necessarily needed, the manufacturer shall meet all the following requirements:

1). Obtaining agreement and acknowledge of the customer in advance,

2). Carbon equivalent Ceq of the material should not be greater than 0.45%,

3). Weldablity test report and welding procedure qualification report of the material should be provided, and report safety supervision administration of AQSIQ for review and approval.

4. For those quenched and tempered low-alloy pressure vessel steel, if the specified minimum tensile strength in the relevant standard is equal to or greater than 540MPa, the phosphor and sulfur contents shall not be greater than 0.020% and 0.015% respectively. The welding cracking sensitivity coefficient Pcm shall not be greater than 0.25%, and the weldablity test report and welding procedure qualification report of the material shall be provided to safety supervision administration of AQSIQ for review and approval.

Note:

a. Ceq=C+Si/24+Mn/6+Ni/40+Cr/5+Mo/4+V/14

b. Pcm=C+Si/30+(Mn+Cu+Cr)/20+Ni/60+Mo/15+V/10+5B

5. Impact toughness of the low alloy steel plate for the proper of transportable pressure vessel shall be conducted. The sampling quantity of the impact test is two steel plate per batch and the test temperature should be -20℃ or per instruction on the drawing. The requirements and acceptable value of the impact test should conform to the applicable provisions in Table 2.

Table 3 Requirements for Impact Test and Acceptable Impact Toughness Value

Minimum standard tensile strength of steel σ_b MPa	Average impact energy value of three test specimens Akv, J
	(Specimen size:?) 10mmx10mmx55mm
≤450	18
> 450--515	20
> 515--650	27
Note: The average impact energy of the three test specimens at test temperature must not less than the requirements as specified in this table. Among them, the impact energy value of one specimen may be less than the average value but in no case it should be less than 70% of the average impact energy value.	

6. The rimmed steels are not permitted in manufacturing the pressure components of pressure vessel.

7. The use of cast irons for pressure components in pressure vessel should accord to the requirements as specified in Table 4. Furthermore, they must not be used for pressure components in the following pressure vessels:

1). The pressure components of pressure vessels used to contain lethal, high-poisonous or middle-poisonous substances.

2). The pressure vessel for containing flammable media with design pressure equal to or more than 0.15 MPa.

3). Waste heat boilers with shell and tube type.

4). Transportable pressure vessels.

Table 4

Type of cast iron	Design pressure MPa	Design temperature ℃
Grey cast iron	0.8	0--250
Nodular or malleable cast iron	1.6	-10—350

Article 56: Requirements for manufacture

1. Cold-formed carbon steel and low-alloy steel convex heads should conduct stress-relieving heat treatment after cold forming.
2. The following pressure vessels should conduct block post-welding heat treatment for relieving residual stress:

1). The pressure vessels used to contain lethal, high-poisonous or middle-poisonous substances.

2). The pressure vessel with wall thickness more than 16mm and design temperature lower than -20℃.
3). The carbon steel pressure vessel with wall thickness more than 32mm (or more than 38mm, if the welding preheat temperature is more than 100℃).
4). The low alloy steel pressure vessel with wall thickness more than 30mm (or more than 34mm, if the welding preheat temperature is more than 100℃).
5). All Cr-Mo alloy steel pressure vessels.

3. For pressure vessels used for storage of mixed LPG at ambient temperature or for other working media which may induce stress corrosion, each steel plate should be examined by UT and the post welding heat treatment should be made for stress relieving.
4. For those pressure vessels, which is designed by fatigue analysis, the reinforcement of welds in category A, and category B butt-joints shall be removed; all welded joints shall have smooth transition.

5) All corrugate plate-and-shell type heat exchanger shall have dismountable and cleanable structure.

Article 57 Requirements for inspection

1. Each of the following pressure vessels should produce a longitudinal product welding test plate:
1). The pressure vessels made of Cr-Mo alloy steel or material with minimum specified tensile strength more than 540 MPa in the relevant standard.
2). The pressure vessels with design temperature of less than -20℃ and requiring low temperature impact test.
3). The pressure vessels requiring heat treatment to assure the mechanical properties of its steel plate.
4). The pressure vessels used to contain lethal or high-poisonous substances,
5). The pressure vessels with design pressure more than 10Mpa,
6). The non-ferrous metal pressure vessels with design pressure more than 1.6Mpa,
7). The welded pressure vessels made by dissimilar metals,
8). Spherical tanks,
9). Transportable pressure vessels.
2. NDE on welded joints of pressure vessel should accord to the requirements as specified in the drawing. The Category A and category B welded joint of the following pressure vessels shall perform 100% RT or UT but the RT should be adopted if the wall thickness of the vessel is equal to or less than 38mm.
1). The class III pressure vessel.
2). The reactors and storage pressure vessels among class II used to contain lethal, high-poisonous or middle-poisonous substances.
3). The pressure vessels with design pressure more than 5.0Mpa.
4). The tube and shell waste heat boilers with design pressure more than 0.6Mpa.
5). The pressure vessels with joint efficiency of 1.0 (except for the pressure vessels which use seamless tube as shell and the close circumferential weld, but the later

should use the suitable welding method and parameter to assure the welding quality).
6). The pressure vessels that can not perform inner examination or pressure-test after put in use.
7). The carbon steel pressure vessels with wall thickness more than 30mm and low alloy steel or stainless steel pressure vessels with wall thickness more than 25mm.
8). The pressure vessels made by Cr-Mo low alloy steel or steels with specified minimum tensile strength more than 540 MPa in the relevant standard.
9). The vessels used to contain lethal or high-poisonous substances.
10). The pressure vessels using pneumatic pressure test other than hydrostatic-test.
11). The pressure vessel designed and constructed per stress analysis standard.
12). Butt joints in inner cylinder of multi-layered pressure vessel and in each cylinder of hot-shrink-fitted pressure vessels.
13). The pressure vessels which should be examined with 100% RT or UT in accordance with design drawing.
3.Except for the requirements as specified in 2. Of this Article, it is permissible to apply spot NDE for category A and B welded joints. The percentage for spot NDE shall not be less than 20% of the length of each weld and not less than 250mm. But all of the following welded joint should be non-destructive examined and the acceptable criterion should be in accordance with the requirements of the pressure vessel.
1). All of the T-joints.
2). All welded joints within opening area (the area within the circle with diameter of 1.5 times of the opening diameter and having the same center of the circle as the opening).
3). The welded joint to be covered by reinforcement rings, saddles or pads.
4). Butt joint in welded head or welded tube plate.
5). All butt joints in nozzles with a nominal diameter greater than 250mm. The percentage and acceptable criteria shall be same as that of the welded joint in the vessel proper.
4. It is not allowed to exempt NDE of the welded joint by decreasing its joint efficiency.
5. The test pressure, test medium, temperature of test medium, pressure holding time and test results shall be included in the pressure test and leak test report. The pressure test and leak test report shall be provided to the customer together with the vessel.

Article 38: Basic requirements for gas cylinders

1. All gas cylinders must be designed and manufactured in accordance with the Chinese national standards. In addition, the design documents of them shall be appraised before type testing. In the case of lack of Chinese standards, the manufacturer should report the applied standard and related technical document to the safety supervision administration of AQSIQ for review and approval. Among them, the key items related to the safety quality of gas cylinder, such as, design temperature, design pressure, bursting testing, NDE, mechanical properties, must not lower than the requirements as specified in the corresponding Chinese national

standard.

2. The color marking of the imported cylinders shall be in accordance with the provisions in Chinese mandatory national standard GB 7144.

Chapter 7 The Resource Requirements for Manufacture Licensing of Safety Appurtenances

Article 59 Basic requirements

1. The applicants for safety appurtenance manufacture licensing must have business license or have registered in relevant local governmental departments where the manufacturer is located.
2. The safety appurtenance manufacturer should have working site, workshop, related manufacturing equipment, and inspection and testing facilities suitable for production of its products.
3. The safety appurtenance manufacturer should keep a sound and an effective management system for product quality. The main links for safety appurtenance production, such as, design, material, welding, NDE, machining, heat treatment, pressure test, product inspection, metrology, etc. shall have relevant responsible personnel in order to assure that the product quality accord to the requirements of the relevant Chinese codes and standards for safety appurtenances. The requirements on quality management system are specified in the Chapter 4 of these Requirements.
4. The safety appurtenance manufacturer should have all the technical staff that meets the demand of design, material, purchasing products, machining, welding, NDE, type testing and quality management of safety appurtenances and the percentage of the technical staff should not less than 5 per cent of all its employees. Among them, the manufacturer must have enough welder, welding operators, and NDE examiners, the quantity and qualified items of them should be suitable for product production.

Article 60 Specific requirements for manufacture licensing of safety valves

1. All types of the safety valve applied for manufacture licensing must have passed type testing.
2. The manufacturer shall have warehouse with enough areas suitable for sorted storage of semi-products, purchasing products with different types and sizes, such as, valve body, bonnet, springs, etc.
3. The manufacturer shall have the facilities with required function and accuracy and suitable for safety valve production, such as, lifting appliances, transporter, NDE equipment, drying and temperature keeping ovens for welding consumables, welding surfacing facilities and machining tools etc.
4. The manufacturer should have furnaces for spring heat treatment, processing and testing facilities for the compression strength of spring.
5. The manufacturer should have lapping machine and the devices for surface quality examination suitable for safety valve production.

6. The manufacturer should have measuring tools suitable for dimension measurement of the parts and components of safety valves.
7. The manufacturer should have facilities for hydrostatic pressure testing and leak testing suitable for safety valve production.
8. The manufacturer should have adjusting and testing set pressure branches suitable for safety valve production.
9. The spring-loaded safety valve manufacturer shall have testing branches for whole items of safety performance testing. The manufacturers producing other than spring-loaded safety valves should have corresponding performance test devices suitable for their produced safety valves.
10. The manufacturer should have apparatus for determining chemical compositions and for mechanical property testing of materials.

Article 61 Specific requirements for manufacture licensing of bursting discs and bursting disc devices

1. All types of the bursting discs and bursting disc devices applied for manufacture licensing must have passed type testing.
2. The manufacturer shall have presses, and material cutting, forming and slotting facilities suitable for the requirements for bursting disc production.
3. The manufacturer should have lifting appliances, transporter, heat treatment devices suitable for bursting disc production.
4. The manufacturer should have machining tools with suitable accuracy and laser cutting machine which meet the requirement of bursting disc production.
5. The manufacturer shall have NDE detectors suitable for product manufacture.
6. The manufacturer should have measuring tools suitable for dimension measurement in production.
7. The manufacturer should have facilities for hydrostatic pressure testing and leak testing suitable for the production of bursting disc devices.
8. The manufacturer should have both ambient-temperature and elevated-temperature bursting pressure testing devices suitable for the products manufactured.
9. The manufacturer should have apparatus for determining chemical compositions and for mechanical property testing of materials.

Article 62 Specific requirements for manufacture licensing of gas cylinder valve

1. All types of the gas cylinder valves applied for manufacture licensing must have passed type testing.
2. The manufacturer shall have warehouse with enough areas suitable for storage of raw material, accessory materials, parts provided by subcontractors, purchasing products and parts, and the end products.
3. The manufacturer should have specific forging machines, machining tools, threaders, lifting appliances and transporter suitable for product manufacture.
4. The manufacturer should have devices and apparatus for product type testing and for other inspection and testing items, such as, opening and closing moment gauge, devices for leak testing, anti-vibrating testing, heat-resisting testing, pressure

testing, durable testing, safe relieving device testing and vacuum testing, etc.

5. The manufacturer should have test apparatus for determining chemical compositions and mechanical properties of valve body materials.

Chapter 6 Supplementary Provisions

Article 63 The AQSIQ shall be responsible for interpretation of these requirements.

Article 64 These Requirements will take effect since January 1, 2004. Simultaneously, “The Requirements of Boiler Manufacture License”--- the Appendix of the “Notification on Issuance of “Requirements for the Manufacture License” (Order No.: Lau-an-guo-ju-zi 52, [1995]), and the “Notification of Issuance of “Rules for Qualification and Register of Pressure Vessel Manufacturer” (Order No.: Lau-an-guo-zi 300, [1995]) both of which were issued by the former Ministry of Labor will be repealed.